Hillmar
Hillmar Industries Ltd.
7371 Vantage Way
Delta, BC V4G 1C9
P:604 946-7115 F:604 946-0329
info@hillmar.com www.hillmar.com

COUPLING RKM
RKM-ND-120-LSH
SPECIFICATION SHEET
SLS & MKTG
ENGLISH

Sheet Number:	
Job Number:	
Form Number:	429-660-49379PT

Company / Project Reference:	Date.:	Page.:	Document Package No.:	Rev.:
		1 OF 1		

Inventor Drawing

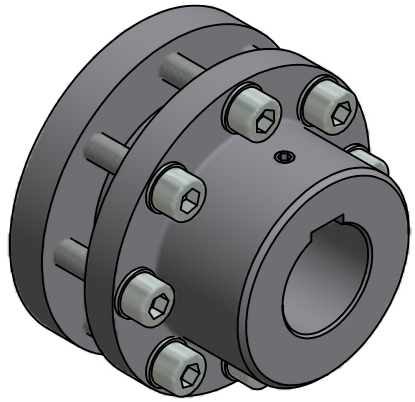

FEATURE	CODE
Rigid coupling	RKM
No disc	ND
Coupling size (Hub OD)	120
Load side	LSH
Maximum coupling torque (Nm)	1050

Example for ordering	RKM-ND-120-LSH

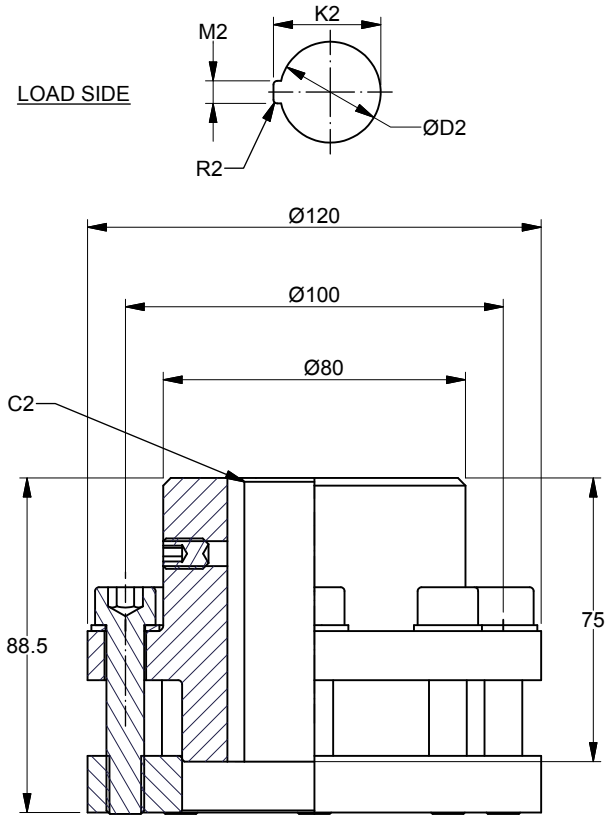

TECHNICAL DATA

Hub bore size MIN. (mm)	40
D2 MAX. (mm)	50
Moment of inertia (kgm^2)	0.006
Mounting bolts	8 x M10
Bolt tightening torque (Nm)	49
MAX. coupling torque TkMAX (Nm)	1050
MAX. coupling speed (RPM)	4100
Weight (kg)	3,75

CUSTOMER SPECIFICATIONS

Load side
D2:_____mm
M2:_____mm
K2:_____mm
R2:_____mm
C2:_____mm

NOTES

Coupling balancing grade ISO 1940-G6.3 is guaranteed for all coupling parts.

All figures are nominal figures only

All dimensions are in millimeters

Document Template #710-101-62058

** ALL TECHNICAL DATA IS SUBJECT TO CHANGE WITHOUT NOTICE **
Hillmar works have a fully registered ISO 9001-2008 quality assurance programme (QCB #01-1525)

C:\TEMP\a3f49bb3-e10c-4cd0-aed8-26c1c4c1b337\8000052839 5\HILLMAR\HILLMAR PRODUCTION\04 THRUSTER DB\0700-4\07004005 PKM-GKM-RKSM-RKX\SPC-SHT-PKM-GKM-RKSM-RKX\04 RKX\49379 RKM-ND-120-LSH.idw